VNQ5160K-E

Quad channel high side driver for automotive applications

Features

Max transient supply voltage	V_{CC}	41V
Operating voltage range	V_{CC}	4.5 to 36V
Max On-State resistance (per ch.)	R_{ON}	160 mΩ
Current limitation (typ)	I_{LIMH}	5.4 A
Off state supply current	I_S	2 µA(1)

1. Typical value with all loads connected

- General features
  - Inrush current active management by power limitation
  - Very low stand-by current
  - 3.0V CMOS compatible input
  - Optimized electromagnetic emission
  - Very low electromagnetic susceptibility
  - In compliance with the 2002/95/EC European directive
- Diagnostic functions
  - Open drain status output
  - On-state open load detection
  - Off-state open load detection
  - Thermal shutdown indication
- Protection
  - Undervoltage shut-down
  - Overvoltage clamp
  - Output stuck to V_{CC} detection
  - Load current limitation
  - Self limiting of fast thermal transients
  - Protection against loss of ground and loss of V_{CC}
  - Thermal shut down
  - Reverse battery protection [(a)]
  - Electrostatic discharge protection

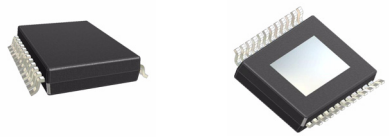

PowerSSO-24

a. See *Application schematic on page 18*

Application

- All types of resistive, inductive and capacitive loads

Description

The VNQ5160K-E is a monolithic device made using STMicroelectronics VIPower M0-5 technology. It is intended for driving resistive or inductive loads with one side connected to ground. Active V_{CC} pin voltage clamp protects the device against low energy spikes (see ISO7637 transient compatibility table).

The device detects open load condition in both on and off states, when STAT_DIS is left open or driven low. Output shorted to V_{CC} is detected in the off state. When STAT_DIS is driven high, the STATUS pin is in a high impedance condition.

Output current limitation protects the device in overload condition. In the case of long duration overload, the device limits the dissipated power to a safe level up to thermal shut-down intervention.

Thermal shut-down with automatic restart allows the device to recover normal operation as soon as a fault condition disappears.

Table 1. Device summary

Package	Tube	Tape and Reel
PowerSSO-24	VNQ5160K-E	VNQ5160KTR-E

Contents

1 Block diagram and pin configuration 5

2 Electrical specifications 7

2.1 Absolute maximum ratings 7

2.2 Thermal data 8

2.3 Electrical characteristics 8

2.4 Electrical characteristics curves 14

3 Application information 18

3.1 GND protection network against reverse battery 18

3.1.1 Solution 1: resistor in the ground line (RGND only). 18

3.1.2 Solution 2: a diode (DGND) in the ground line. 19

3.2 Load dump protection 19

3.3 mC I/Os Protection 19

3.4 Open load detection in off state 19

3.5 Maximum demagnetization energy (VCC = 13.5V) 22

4 Package and PC board thermal data 23

4.1 PowerSSO-24 thermal data 23

5 Package and packing information 26

5.1 ECOPACK® packages 26

5.2 PowerSSO-24™ mechanical data 26

5.3 Packing information 28

6 Revision history 29

List of tables

Table 1. Device summary . . . 1
Table 2. Pin functions . . . 5
Table 3. Suggested connections for unused and n.c. pins . . . 6
Table 4. Absolute maximum ratings . . . 7
Table 5. Thermal data . . . 8
Table 6. Power section . . . 8
Table 7. Switching (VCC = 13V; Tj = 25°C) . . . 9
Table 8. Status pin (V_{SD}=0) . . . 9
Table 9. Protection . . . 9
Table 10. Openload detection . . . 10
Table 11. Logic input . . . 10
Table 12. Truth table . . . 12
Table 13. Electrical transient requirements . . . 13
Table 14. Thermal parameters . . . 25
Table 15. PowerSSO-24™ mechanical data . . . 26
Table 16. Document revision history . . . 29

List of figures

Figure 1. Block diagram . . . 5
Figure 2. Configuration diagram (top view) . . . 6
Figure 3. Current and voltage conventions . . . 7
Figure 4. Status timings . . . 11
Figure 5. Output voltage drop limitation . . . 11
Figure 6. Switching characteristics . . . 12
Figure 7. Off state output current . . . 14
Figure 8. High level input current . . . 14
Figure 9. Input clamp voltage . . . 14
Figure 10. Input low level . . . 14
Figure 11. Input high level . . . 14
Figure 12. Input hysteresis voltage . . . 14
Figure 13. Status low output voltage . . . 15
Figure 14. Status leakage current . . . 15
Figure 15. On state resistance vs. T_{case} . . . 15
Figure 16. On state resistance vs. V_{CC} . . . 15
Figure 17. Status clamp voltage . . . 15
Figure 18. Openload on-state detection threshold . . . 15
Figure 19. Openload off state voltage detection threshold . . . 16
Figure 20. Undervoltage shutdown . . . 16
Figure 21. Turn-on voltage slope . . . 16
Figure 22. I_{LIMH} vs. T_{case} . . . 16
Figure 23. Turn-off voltage slope . . . 16
Figure 24. High-level STAT_DIS voltage . . . 16
Figure 25. STAT_DIS clamp voltage . . . 17
Figure 26. Low level STAT_DIS voltage . . . 17
Figure 27. Application schematic . . . 18
Figure 28. Open load detection in off state . . . 20
Figure 29. Waveforms . . . 21
Figure 30. Maximum turn-off current versus inductance (for each channel) . . . 22
Figure 31. PowerSSO-24 PC board . . . 23
Figure 32. Rthj-amb vs. PCB copper area in open box free air condition (one channel ON) . . . 23
Figure 33. PowerSSO-24 thermal impedance junction ambient single pulse (one channel on) . . . 24
Figure 34. Thermal fitting model of a double channel HSD in PowerSSO-24 . . . 24
Figure 35. PowerSSO-24™ package dimensions . . . 26
Figure 36. PowerSSO-24 tube shipment (no suffix) . . . 28
Figure 37. Tape and reel shipment (suffix “TR”) . . . 28

1 Block diagram and pin configuration

Figure 1. Block diagram

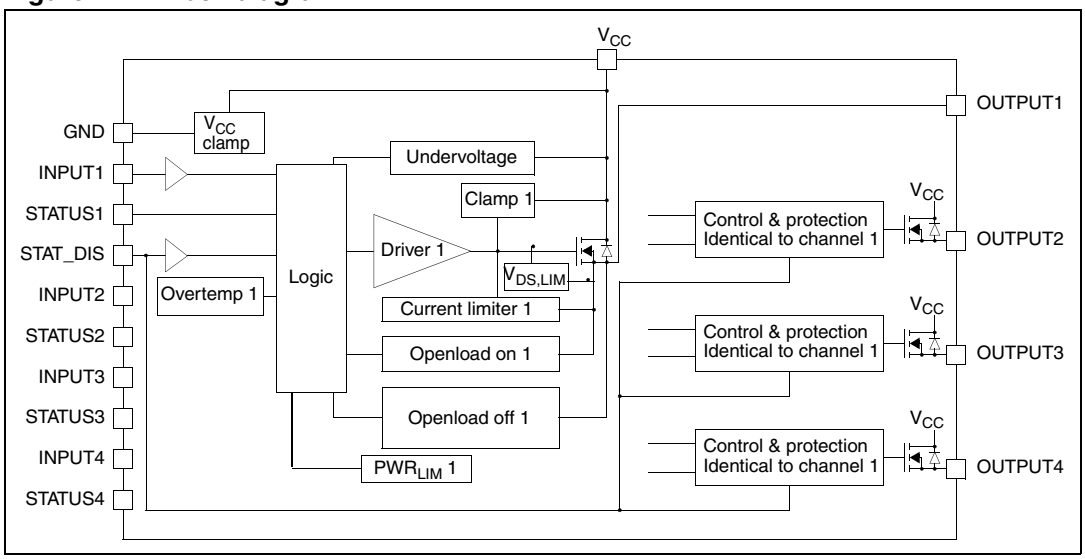

Table 2. Pin functions

Name	Function
V_{CC}	Battery connection
OUTPUTn	Power output
GND	Ground connection. Must be reverse battery protected by an external diode/resistor network
INPUTn	Voltage controlled input pin with hysteresis, CMOS compatible. Controls output switch state
STATUSn	Open drain digital diagnostic pin
STAT_DIS	Active high CMOS compatible pin, to disable the STATUS pin

Figure 2. Configuration diagram (top view)

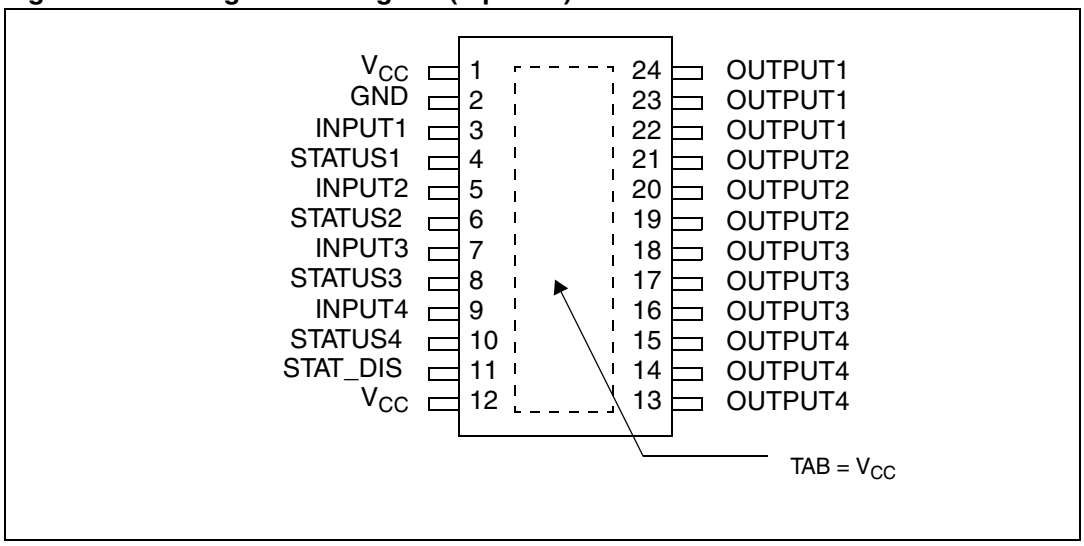

Table 3. Suggested connections for unused and n.c. pins

Connection / Pin	Status	N.C.	Output	Input	STAT_DIS
Floating	X	X	X	X	X
To ground	N.R.(1)	X	N.R.	Through 10kΩ resistor	Through 10kΩ resistor

1. Not recommended

2 Electrical specifications

Figure 3. Current and voltage conventions

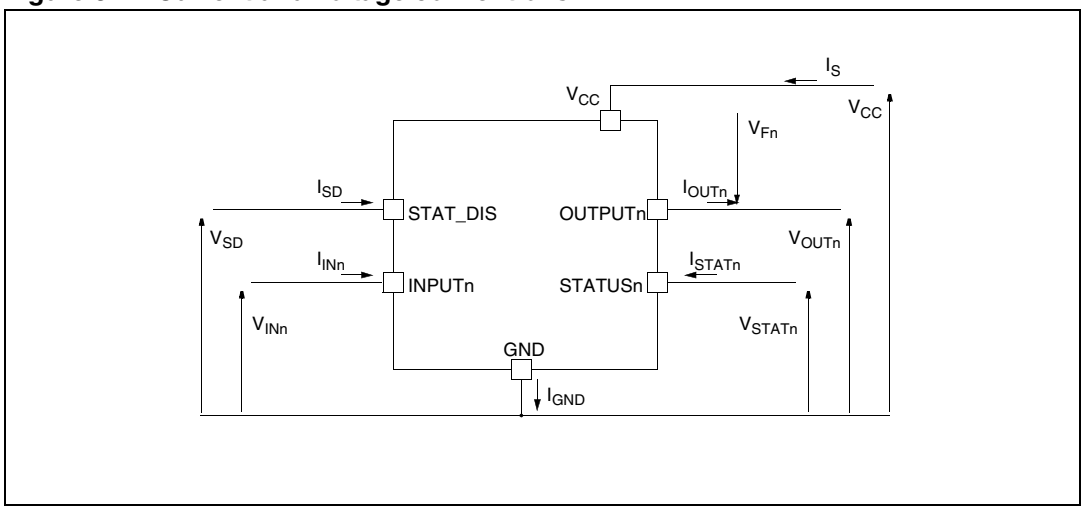

Note: $V_{Fn} = V_{OUTn} - V_{CCn}$ *during reverse battery condition*

2.1 Absolute maximum ratings

Table 4. Absolute maximum ratings

Symbol	Parameter	Value	Unit
V_{CC}	DC supply voltage	41	V
- V_{CC}	Reverse DC supply voltage	0.3	V
- I_{GND}	DC reverse ground pin current	200	mA
I_{OUT}	DC output current	Internally limited	A
- I_{OUT}	Reverse DC output current	6	A
I_{IN}	DC input current	+10 / -1	mA
I_{STAT}	DC status current	+10 / -1	mA
I_{STAT_DIS}	DC status disable current	+10 / -1	mA
E_{MAX}	Maximum switching energy (single pulse) (L=12mH; R_L=0Ω; V_{bat}=13.5V; T_{jstart}=150ºC; $I_{OUT} = I_{limL}$*(Typ.)*)	33	mJ
V_{ESD}	Electrostatic discharge (Human Body Model: R=1.5KΩ; C=100pF) - INPUT - STATUS - STAT_DIS - OUTPUT - V_{CC}	 4000 4000 4000 5000 5000	 V V V V V
V_{ESD}	Charge device model (CDM-AEC-Q100-011)	750	V

Table 4. Absolute maximum ratings

T_j	Junction operating temperature	-40 to 150	°C
T_{stg}	Storage temperature	- 55 to 150	°C

2.2 Thermal data

Table 5. Thermal data

Symbol	Parameter	Max. value	Unit
$R_{thj\text{-}case}$	Thermal resistance junction-case (with one channel on)	8	°C/W
$R_{thj\text{-}amb}$	Thermal resistance junction-ambient	See *Figure 32.*	°C/W

2.3 Electrical characteristics

8V<V_{CC}<36V; -40°C< T_j <150°C, unless otherwise specified

Table 6. Power section

Symbol	Parameter	Test conditions	Min.	Typ.	Max.	Unit
V_{CC}	Operating supply voltage		4.5	13	36	V
V_{USD}	Undervoltage shut-down			3.5	4.5	V
$V_{USDhyst}$	Undervoltage shut-down hysteresis			0.5		V
R_{ON}	On state resistance(1)	I_{OUT}=1A; T_j=25°C I_{OUT}=1A; T_j=150°C I_{OUT}=1A; V_{CC}=5V; T_j=25°C			160 320 210	mΩ mΩ mΩ
V_{clamp}	Clamp voltage	I_S=20 mA	41	46	52	V
I_S	Supply current	Off State; V_{CC}=13V; V_{IN}=V_{OUT}=0V; T_j=25°C On State; V_{IN}=5V; V_{CC}=13V; I_{OUT}=0A		2(2) 8	5(2) 14	µA mA
$I_{L(off1)}$	Off state output current(1)	V_{IN}=V_{OUT}=0V; V_{CC}=13V; T_j=25°C V_{IN}=V_{OUT}=0V; V_{CC}=13V; T_j=125°C	0 0	0.01	3 5	µA µA
$I_{L(off2)}$	Off state output current(1)	V_{IN}=0V; V_{OUT}=4V	-75		0	µA
V_F	Output - V_{CC} diode voltage(1)	-I_{OUT}=0.6A; T_j=150°C			0.7	V

1. For each channel.
2. PowerMOS leakage included.

Table 7. Switching (V_{CC} = 13V; T_j = 25°C)

Symbol	Parameter	Test conditions	Min.	Typ.	Max.	Unit
$t_{d(on)}$	Turn-on delay time	R_L=13Ω (see *Figure 6.*)		15		µs
$t_{d(off)}$	Turn-off delay time	R_L=13Ω (see *Figure 6.*)		15		µs
$dV_{OUT}/dt_{(on)}$	Turn-on voltage slope	R_L=13Ω		See *Figure 6.*		V/µs
$dV_{OUT}/dt_{(off)}$	Turn-off voltage slope	R_L=13Ω		See *Figure 6.*		V/µs
W_{ON}	Switching energy losses during t_{won}	R_L=13Ω (see *Figure 6.*)		0.05		mJ
W_{OFF}	Switching energy losses during t_{woff}	R_L=13Ω (see *Figure 6.*)		0.03		mJ

Table 8. Status pin (V_{SD}=0)

Symbol	Parameter	Test conditions	Min	Typ	Max	Unit
V_{STAT}	Status low output voltage	I_{STAT}= 1.6 mA, V_{SD}=0V			0.5	V
I_{LSTAT}	Status leakage current	Normal operation or V_{SD}=5V, V_{STAT}= 5V			10	µA
C_{STAT}	Status pin input capacitance	Normal operation or V_{SD}=5V, V_{STAT}= 5V			100	pF
V_{SCL}	Status clamp voltage	I_{STAT}= 1mA I_{STAT}= -1mA	5.5	 -0.7	7	V V

Table 9. Protection(1)

Symbol	Parameter	Test conditions	Min.	Typ.	Max.	Unit
I_{limH}	DC Short circuit current	V_{CC}=13V 5V<V_{CC}<36V	3.8	5.4	7.5 7.5	A A
I_{limL}	Short circuit current during thermal cycling	V_{CC}=13V T_R<T_j<T_{TSD}		2		A
T_{TSD}	Shutdown temperature		150	175	200	°C
T_R	Reset temperature		T_{RS} + 1	T_{RS} + 5		°C
T_{RS}	Thermal reset of STATUS		135			°C
T_{HYST}	Thermal hysteresis (T_{TSD}-T_R)			7		°C
t_{SDL}	Status delay in overload conditions	T_j>T_{TSD} (See *Figure 4.*)			20	µs

Table 9. Protection(1)

Symbol	Parameter	Test conditions	Min.	Typ.	Max.	Unit
V_{DEMAG}	Turn-off output voltage clamp	I_{OUT}=1A; V_{IN}=0; L=20mH	V_{CC}-41	V_{CC}-46	V_{CC}-52	V
V_{ON}	Output voltage drop limitation	I_{OUT}=0.03A (see *Figure 5.*) T_j= -40°C...+150°C		25		mV

1. To ensure long term reliability under heavy overload or short circuit conditions, protection and related diagnostic signals must be used together with a proper software strategy. If the device is subjected to abnormal conditions, this software must limit the duration and number of activation cycles

Table 10. Openload detection

Symbol	Parameter	Test conditions	Min	Typ	Max	Unit
I_{OL}	Openload ON state detection threshold	V_{IN} = 5V ,8V<V_{CC}<18V	10	See *Figure 18.*	40	mA
$t_{DOL(on)}$	Openload ON state detection delay	I_{OUT} = 0A, V_{CC}=13V (See *Figure 4.*)			200	µs
t_{POL}	Delay between INPUT falling edge and STATUS rising edge in Openload condition	I_{OUT} = 0A (See *Figure 4.*)	200	500	1000	µs
V_{OL}	Openload OFF state voltage detection threshold	V_{IN} = 0V, 8V<V_{CC}<16V	2	See *Figure 19.*	4	V
t_{DSTKON}	Output short circuit to V_{cc} detection delay at turn off	(See *Figure 4.*)	180		t_{POL}	µs

Table 11. Logic input

Symbol	Parameter	Test conditions	Min.	Typ.	Max.	Unit
V_{IL}	Input low level				0.9	V
I_{IL}	Low level input current	V_{IN} = 0.9V	1			µA
V_{IH}	Input high level		2.1			V
I_{IH}	High level input current	V_{IN} = 2.1V			10	µA
$V_{I(hyst)}$	Input hysteresis voltage		0.25			V
V_{ICL}	Input clamp voltage	I_{IN} = 1mA I_{IN} = -1mA	5.5	 -0.7	7	V V
V_{SDL}	STAT_DIS low level voltage				0.9	V
I_{SDL}	Low level STAT_DIS current	V_{SD}=0.9V	1			µA
V_{SDH}	STAT_DIS high level voltage		2.1			V

Table 11. Logic input

Symbol	Parameter	Test conditions	Min.	Typ.	Max.	Unit
I_{SDH}	High level STAT_DIS current	V_{SD}=2.1V			10	µA
$V_{SD(hyst)}$	STAT_DIS hysteresis voltage		0.25			V
V_{SDCL}	STAT_DIS clamp voltage	I_{SD}=1mA I_{SD}=-1mA	5.5	 -0.7	7	V V

Figure 4. Status timings

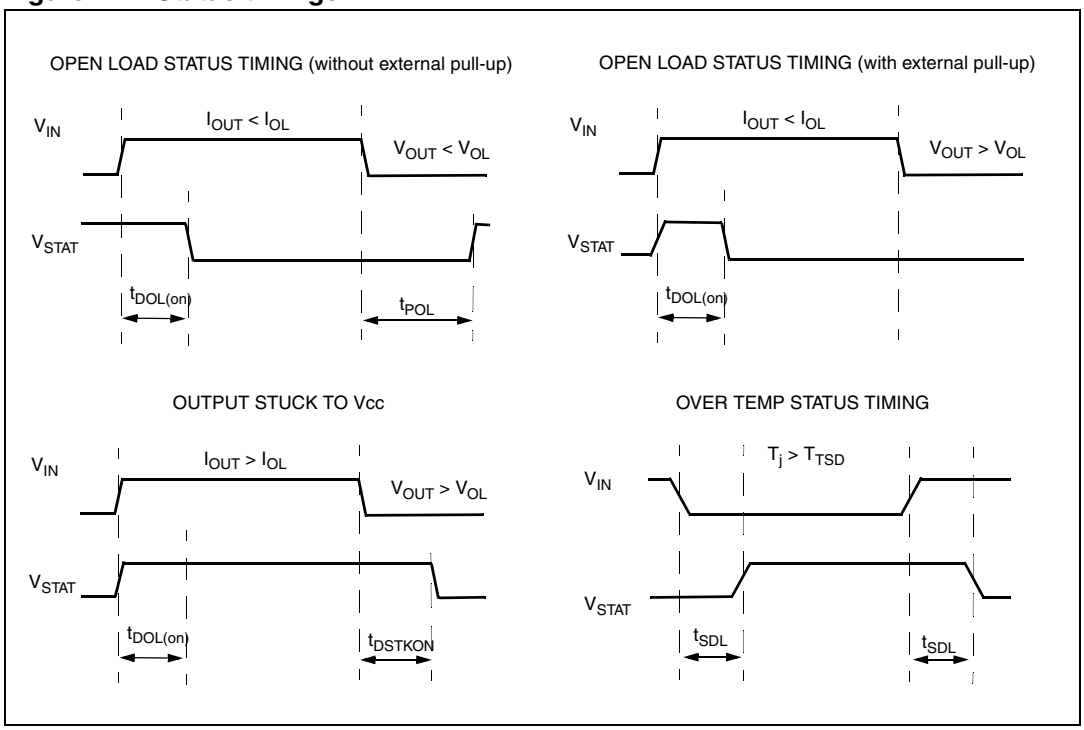

Figure 5. Output voltage drop limitation

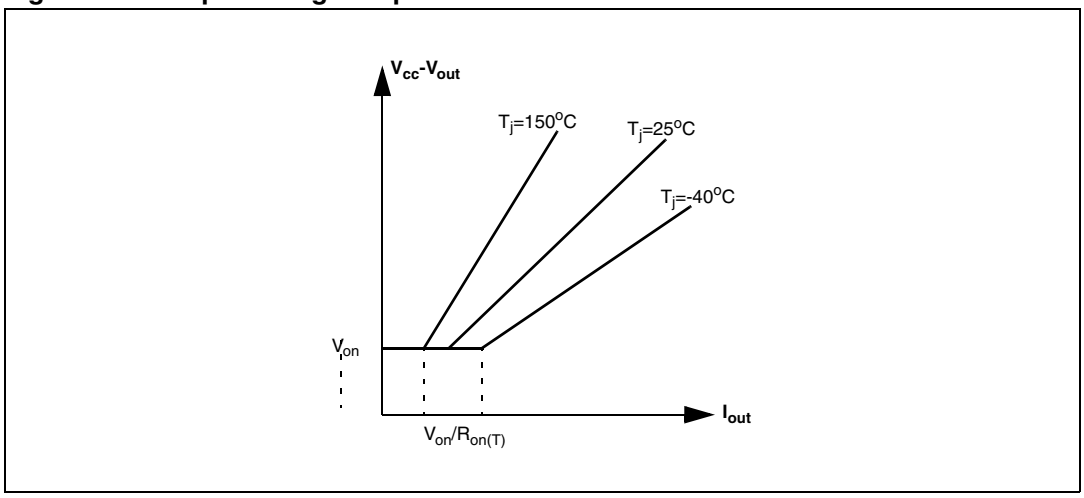

Table 12. Truth table

Conditions	INPUTn	OUTPUTn	STATUSn (V_{SD}=0V)(1)
Normal operation	L H	L H	H H
Current limitation	L H	L X	H H
Overtemperature	L H	L L	H L
Undervoltage	L H	L L	X X
Output voltage > V_{OL}	L H	H H	L(2) H
Output current < I_{OL}	L H	L H	H(3) L

1. If the V_{SD} is high, the STATUS pin is in a high impedance.
2. The STATUS pin is low with a delay equal to t_{DSTKON} after INPUT falling edge.
3. The STATUS pin becomes high with a delay equal to t_{POL} after INPUT falling edge.

Figure 6. Switching characteristics

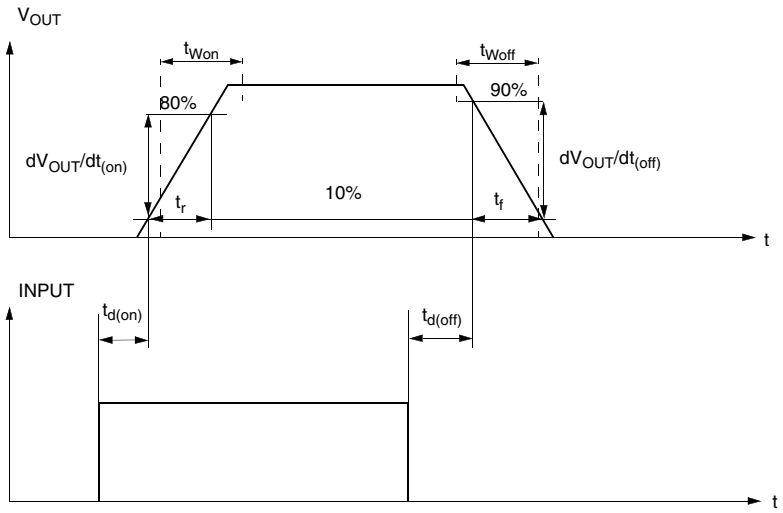

Table 13. Electrical transient requirements

ISO 7637-2: 2004(E) Test pulse	Test levels(1)		Number of pulses or test times	Burst cycle/pulse repetition time		Delays and Impedance
	III	IV				
1	-75 V	-100 V	5000 pulses	0.5 s	5 s	2 ms, 10 Ω
2a	+37 V	+50 V	5000 pulses	0.2 s	5 s	50 µs, 2 Ω
3a	-100 V	-150 V	1h	90 ms	100 ms	0.1 µs, 50 Ω
3b	+75 V	+100 V	1h	90 ms	100 ms	0.1 µs, 50 Ω
4	-6 V	-7 V	1 pulse			100 ms, 0.01 Ω
5b(2)	+65 V	+87 V	1 pulse			400 ms, 2 Ω

ISO 7637-2: 2004(E) Test pulse	Test level results(1)	
	III	IV
1	C	C
2a	C	C
3a	C	C
3b	C	C
4	C	C
5b(2)	C	C

1. The above test levels must be considered referred to V_{CC} = 13.5V except for pulse 5b
2. Valid in case of external load dump clamp: 40V maximum referred to ground.

Class	Contents
C	All functions of the device are performed as designed after exposure to disturbance.
E	One or more functions of the device are not performed as designed after exposure to disturbance and cannot be returned to proper operation without replacing the device.

2.4 Electrical characteristics curves

Figure 7. Off state output current

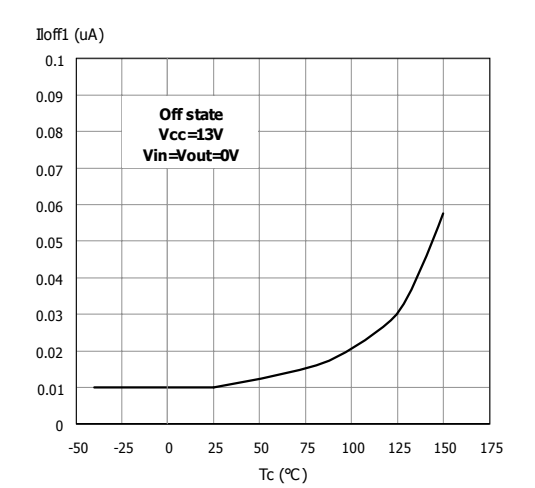

Figure 8. High level input current

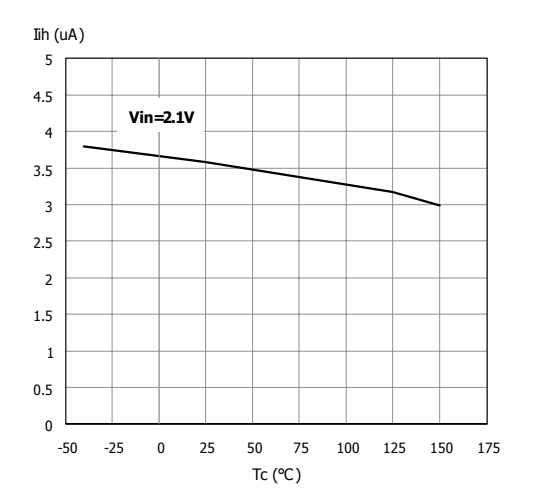

Figure 9. Input clamp voltage

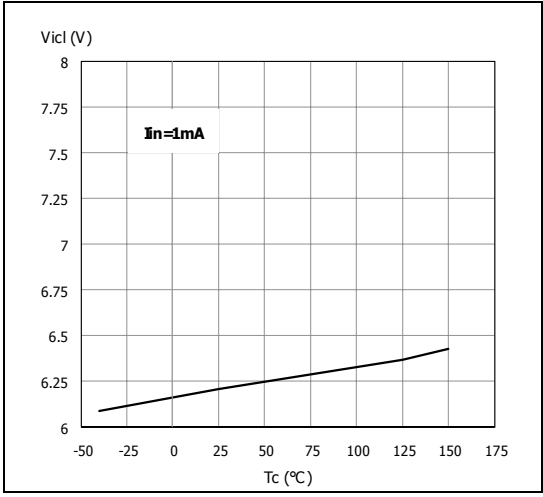

Figure 10. Input low level

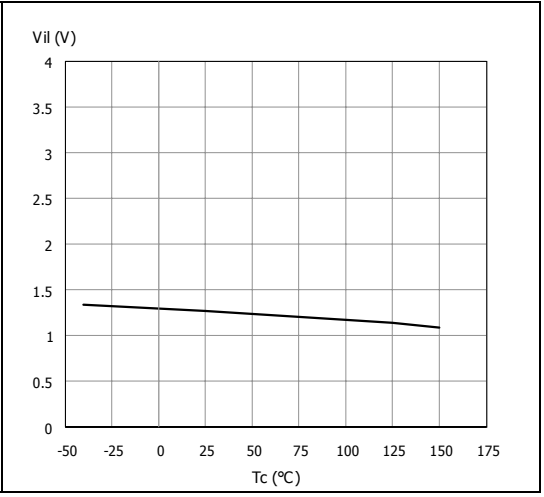

Figure 11. Input high level

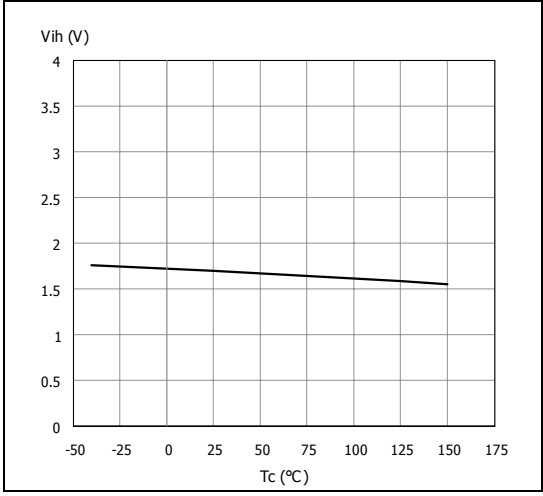

Figure 12. Input hysteresis voltage

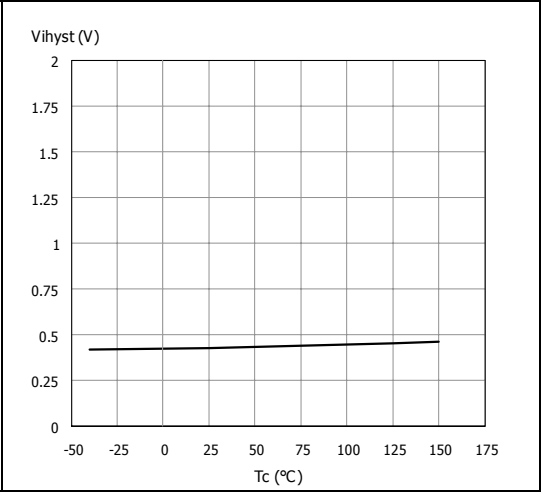

Figure 13. Status low output voltage

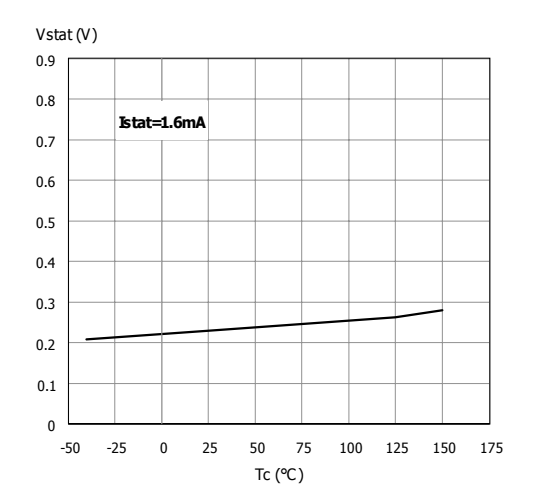

Figure 14. Status leakage current

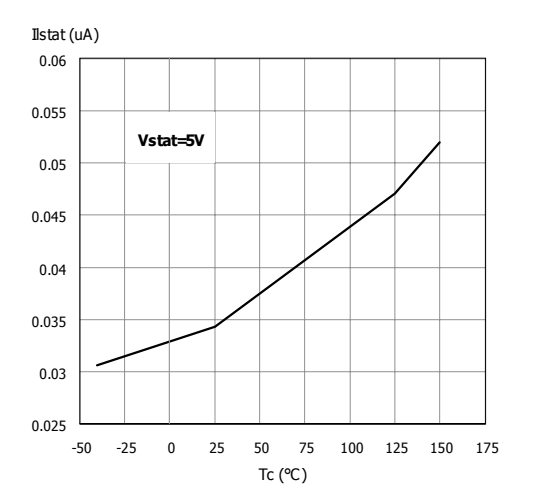

Figure 15. On state resistance vs. T_{case}

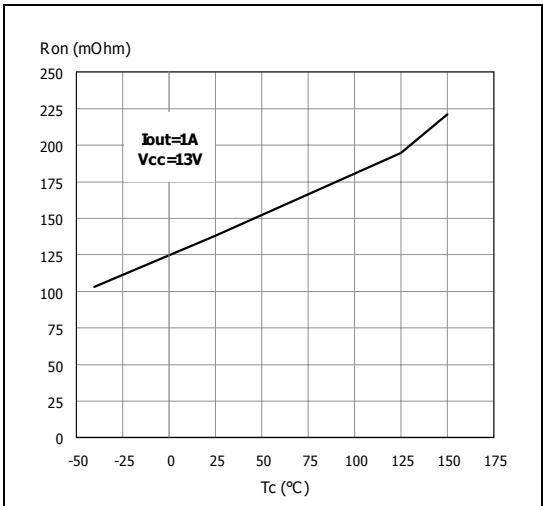

Figure 16. On state resistance vs. V_{CC}

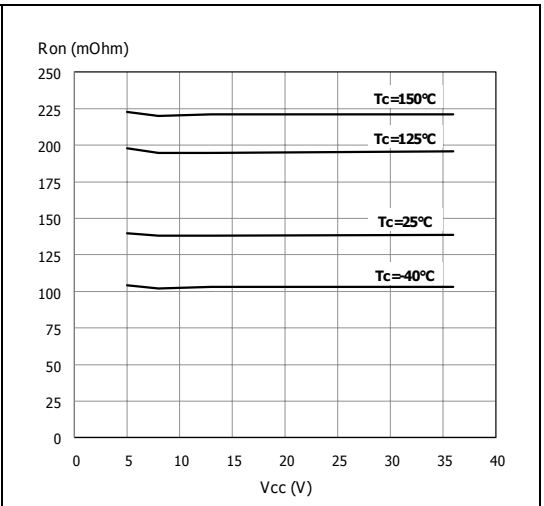

Figure 17. Status clamp voltage

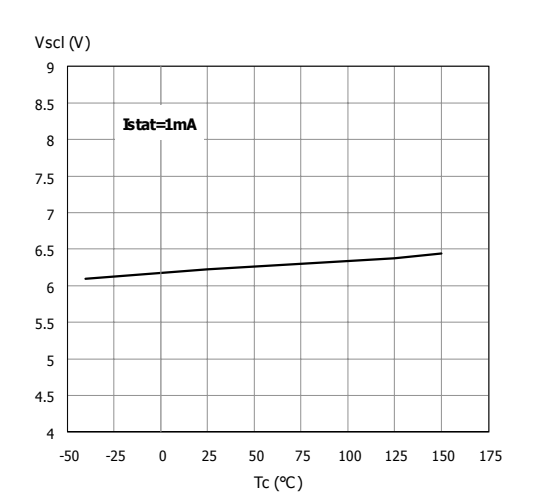

Figure 18. Openload on-state detection threshold

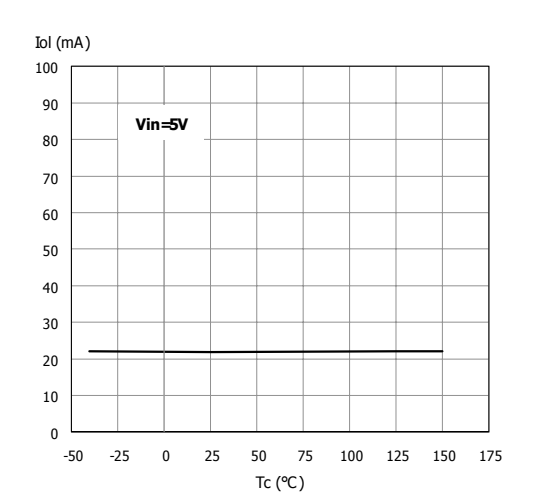

Figure 19. Openload off state voltage detection threshold

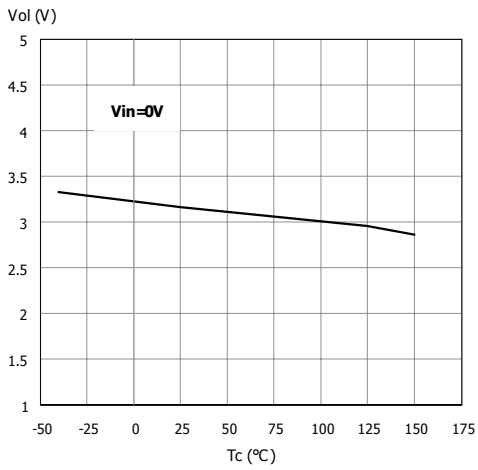

Figure 20. Undervoltage shutdown

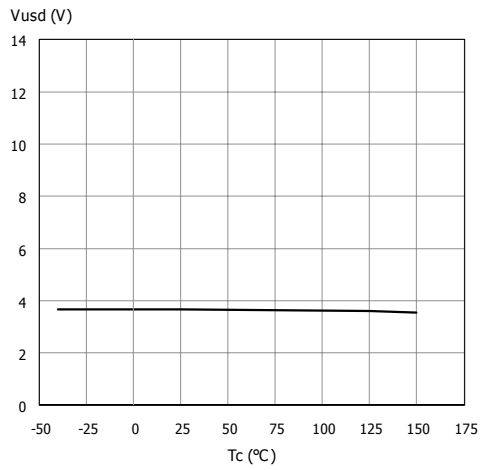

Figure 21. Turn-on voltage slope

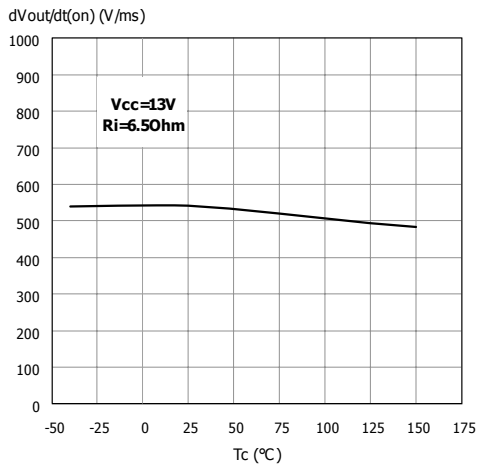

Figure 22. I_{LIMH} vs. T_{case}

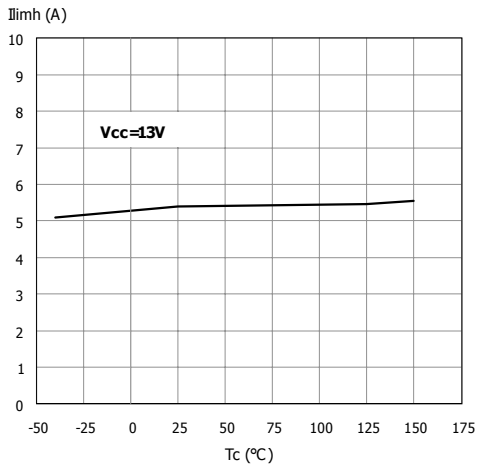

Figure 23. Turn-off voltage slope

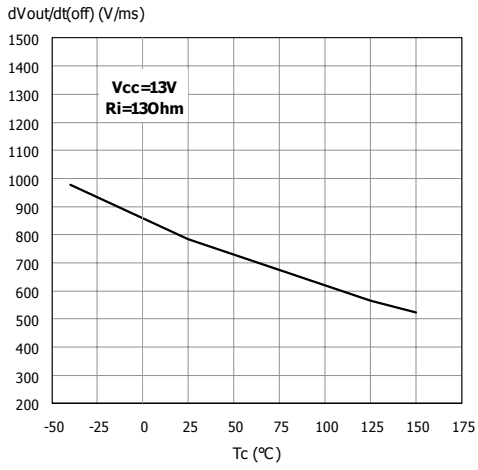

Figure 24. High-level STAT_DIS voltage

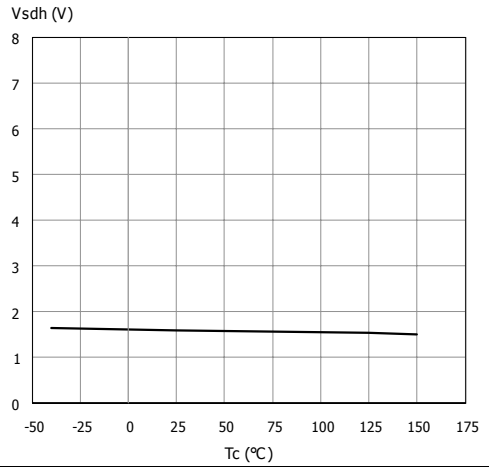

Figure 25. STAT_DIS clamp voltage

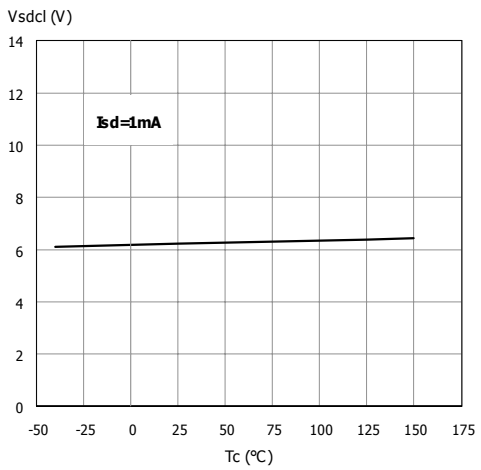

Figure 26. Low level STAT_DIS voltage

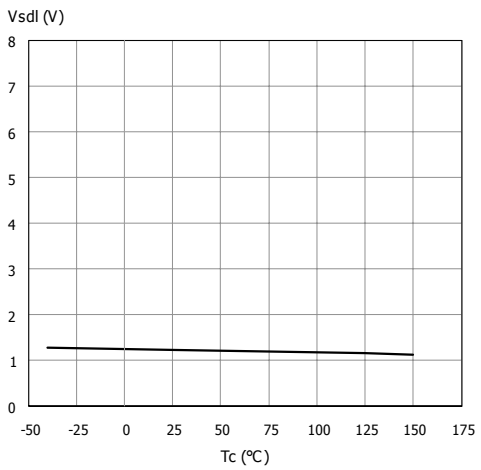

3 Application information

Figure 27. Application schematic

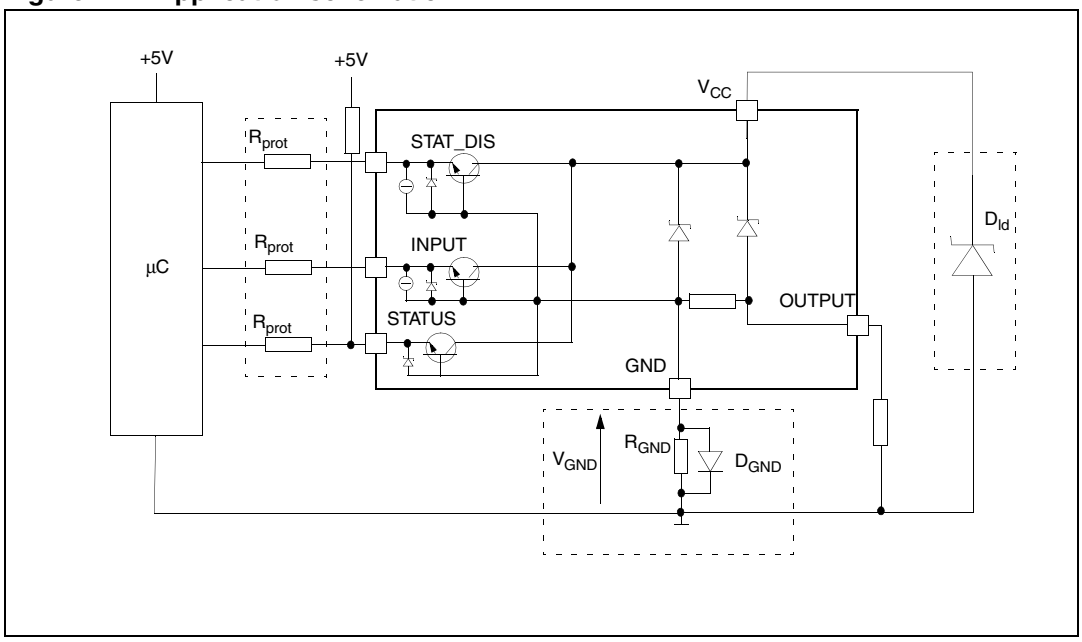

Note: Channels 2, 3 and 4 have the same internal circuit as channel 1.

3.1 GND protection network against reverse battery

3.1.1 Solution 1: resistor in the ground line (R_{GND} only).

This solution can be used with any type of load.

The following is an indication on how to dimension the R_{GND} resistor.

1. $R_{GND} \leq 600mV / (I_{S(on)max})$.
2. $R_{GND} \geq (-V_{CC}) / (-I_{GND})$

where $-I_{GND}$ is the DC reverse ground pin current and can be found in the absolute maximum rating section of the device datasheet.

Power dissipation in R_{GND} (when $V_{CC}<0$: during reverse battery situations) is:

$P_D = (-V_{CC})^2/R_{GND}$

This resistor can be shared amongst several different HSDs. Please note that the value of this resistor should be calculated with formula (1) where $I_{S(on)max}$ becomes the sum of the maximum on-state currents of the different devices.

Please note that if the microprocessor ground is not shared by the device ground then the R_{GND} will produce a shift ($I_{S(on)max} * R_{GND}$) in the input thresholds and the status output values. This shift will vary depending on how many devices are ON in the case of several high side drivers sharing the same R_{GND}.

If the calculated power dissipation leads to a large resistor or several devices have to share the same resistor then ST suggests that Solution 2 is used(see below).

3.1.2 Solution 2: a diode (D_{GND}) in the ground line.

A resistor (R_{GND}=1kΩ) should be inserted in parallel with D_{GND} if the device drives an inductive load.

This small signal diode can be safely shared amongst several different HSDs. Also in this case, the presence of the ground network will produce a shift (~600mV) in the input threshold and in the status output values if the microprocessor ground is not common with the device ground. This shift will not vary if more than one HSD shares the same diode/resistor network.

3.2 Load dump protection

D_{ld} is necessary (Voltage Transient Suppressor) if the load dump peak voltage exceeds to V_{CC} max DC rating. The same applies if the device is subject to transients on the V_{CC} line that are greater than the ones shown in the ISO T/R 7637/1 table.

3.3 µC I/Os Protection

If a ground protection network is used and negative transients are present on the V_{CC} line, the control pins will be pulled negative. ST suggests the insertion of resistors (R_{prot}) in the lines to prevent the µC I/Os pins from latching up.

The values of these resistors are a compromise between the leakage current of µC and the current required by the HSD I/Os (input levels compatibility) with the latch-up limit of the µC I/Os.

$-V_{CCpeak}/I_{latchup} \leq R_{prot} \leq (V_{OH\mu C}-V_{IH}-V_{GND}) / I_{IHmax}$

Calculation example:

For V_{CCpeak}= - 100V and $I_{latchup} \geq$ 20mA; $V_{OH\mu C} \geq$ 4.5V

5kΩ $\leq R_{prot} \leq$ 65kΩ

Recommended R_{prot} value is 10kΩ

3.4 Open load detection in off state

Off-state open load detection requires an external pull-up resistor (R_{PU}) connected between the OUTPUT pin and a positive supply voltage (V_{PU}) like the +5V line used to supply the microprocessor.

The external resistor has to be selected according to the following requirements:

1. No false open load indication when load is connected: in this case we have to avoid V_{OUT} to be higher than V_{Olmin}; this results in the following condition:
   $V_{OUT}=(V_{PU}/(R_L+R_{PU}))R_L<V_{Olmin}$.
2. No misdetection when the load is disconnected: in this case the V_{OUT} has to be higher than V_{OLmax}; this results in the following condition:
   $R_{PU}<(V_{PU}-V_{OLmax})/I_{L(off2)}$.

Because $I_{s(OFF)}$ may significantly increase if V_{out} is pulled high (up to several mA), the pull-up resistor R_{PU} should be connected to a supply that is switched OFF when the module is in standby.

The values of V_{OLmin}, V_{OLmax} and $I_{L(off2)}$ are available in the Electrical characteristics section.

Figure 28. Open load detection in off state

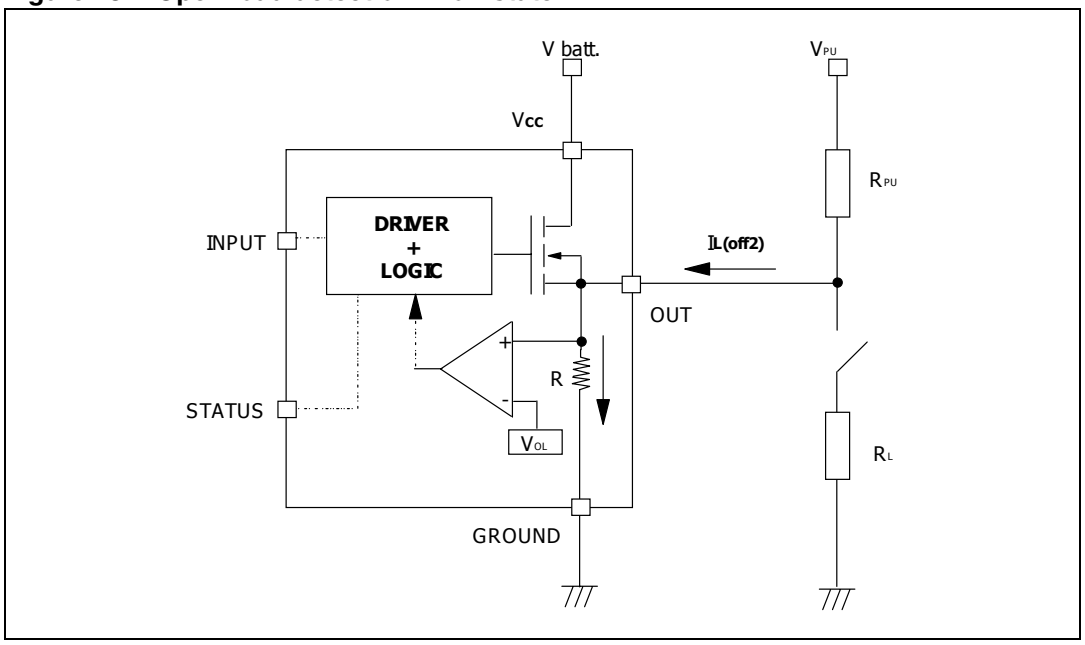

Figure 29. Waveforms

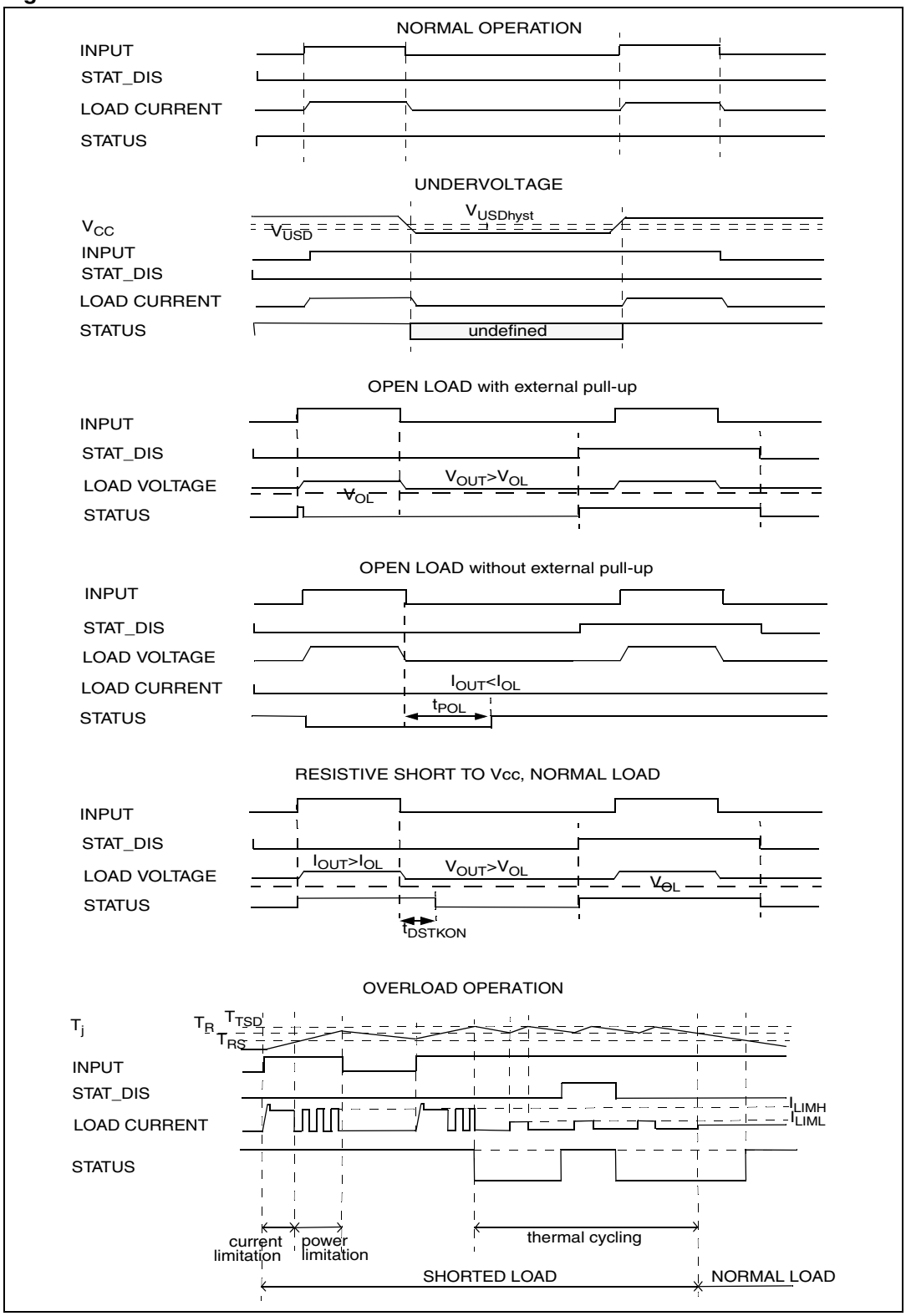

3.5 Maximum demagnetization energy (V_{CC} = 13.5V)

Figure 30. Maximum turn-off current versus inductance (for each channel)

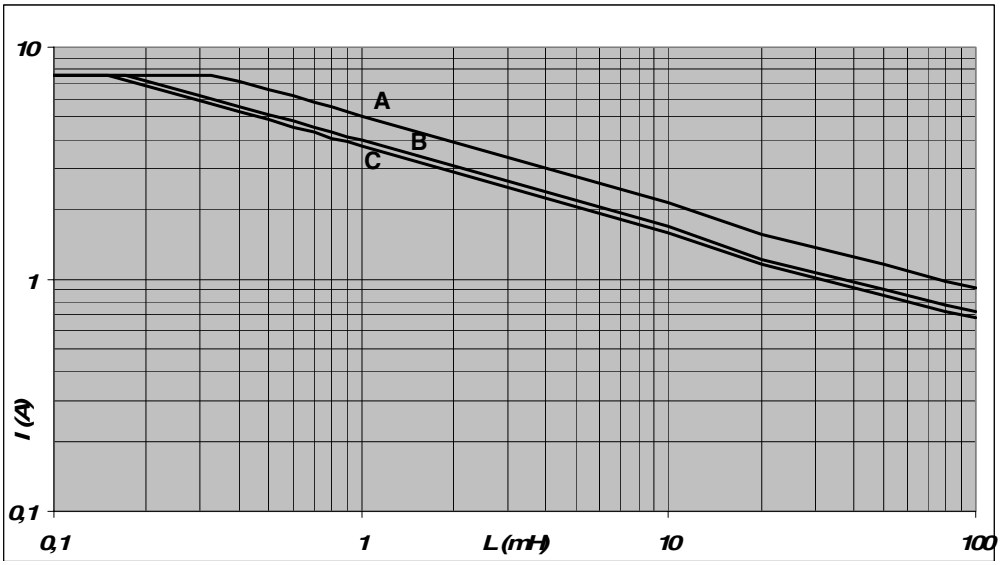

A: T_{jstart} = 150°C single pulse

B: T_{jstart} = 100°C repetitive pulse

C: T_{jstart} = 125°C repetitive pulse

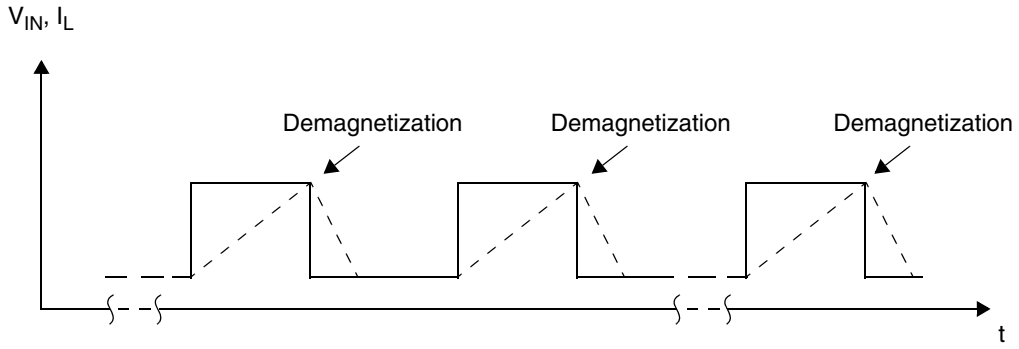

Note: Values are generated with R_L = 0Ω

In case of repetitive pulses, T_{jstart} (at beginning of each demagnetization) of every pulse must not exceed the temperature specified above for curves A and B.

4 Package and PC board thermal data

4.1 PowerSSO-24 thermal data

Figure 31. PowerSSO-24 PC board

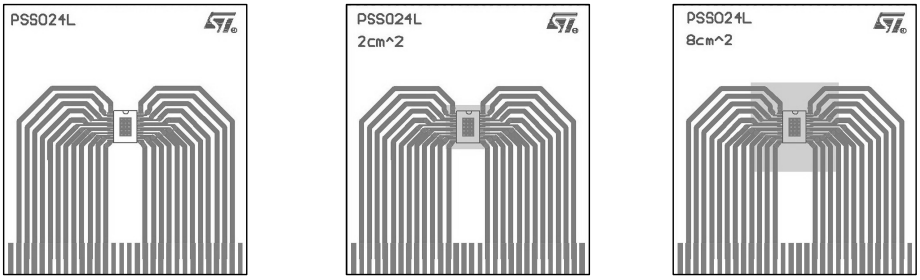

Note: Layout condition of R_{th} and Z_{th} measurements (PCB: Double layer, Thermal Vias, FR4 area= 77mm x 86mm, PCB thickness=1.6mm, Cu thickness=70mm (front and back side), Copper areas: from minimum pad lay-out to 8cm^2).

Figure 32. $R_{thj\text{-}amb}$ vs. PCB copper area in open box free air condition (one channel ON)

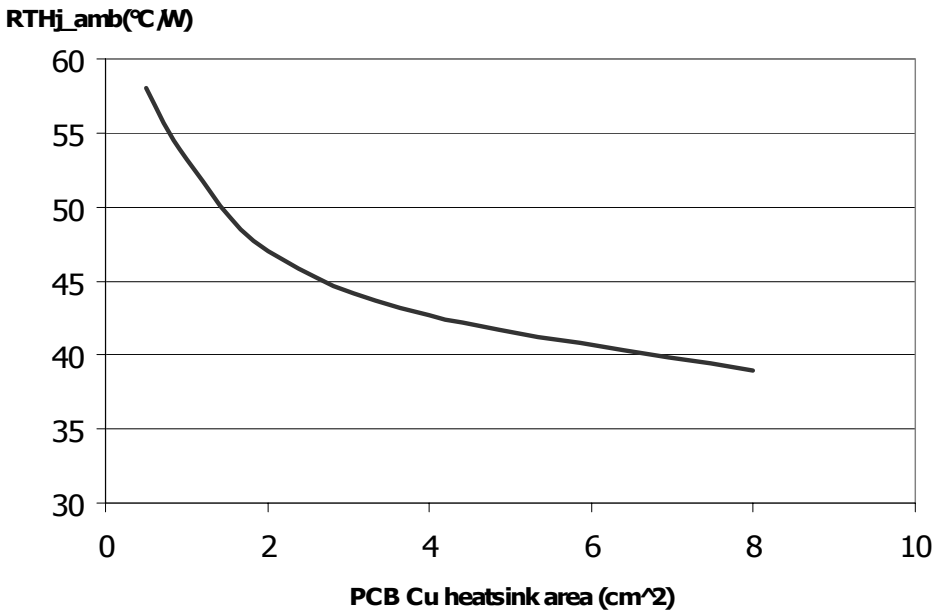

Figure 33. PowerSSO-24 thermal impedance junction ambient single pulse (one channel on)

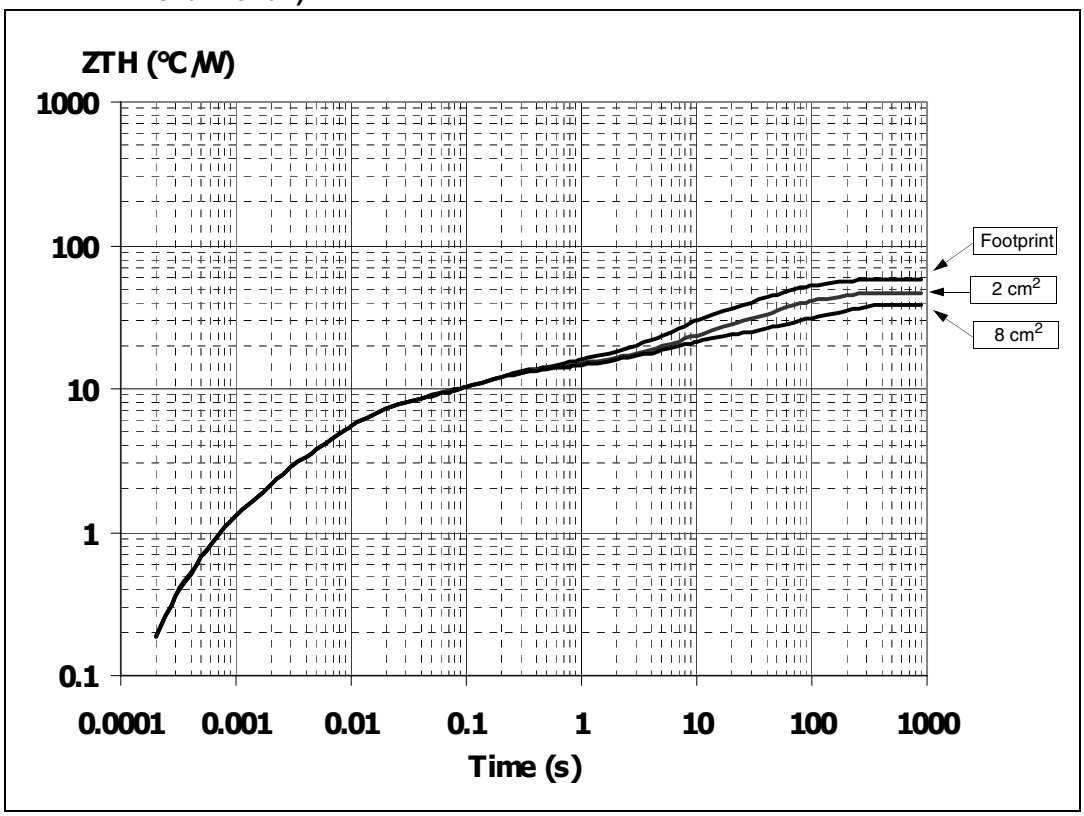

Figure 34. Thermal fitting model of a double channel HSD in PowerSSO-24[b]

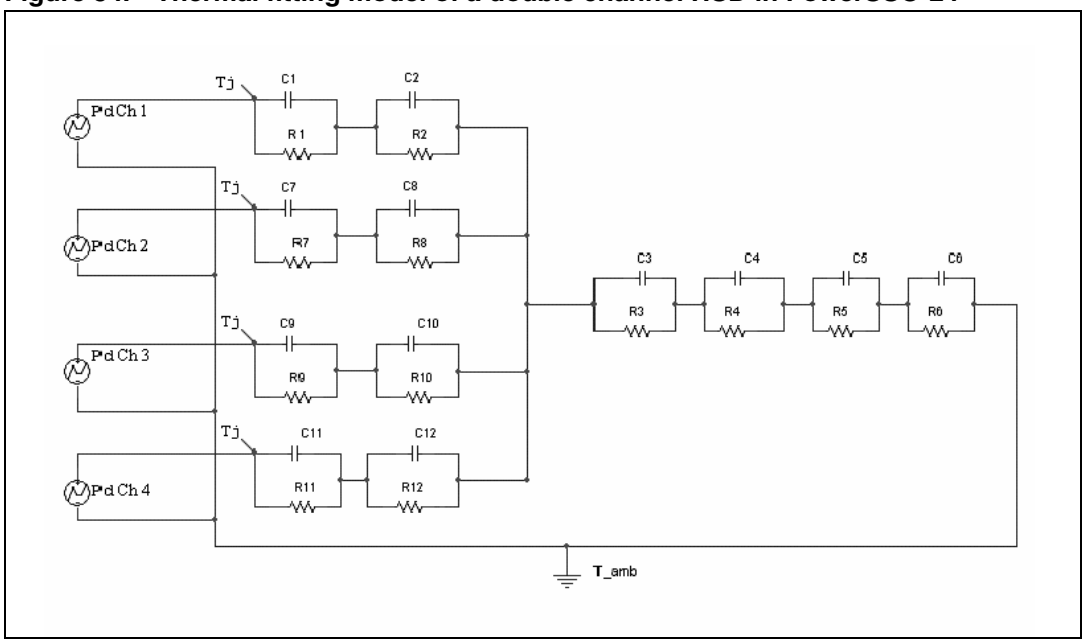

b. The fitting model is a semplified thermal tool and is valid for transient evolutions where the embedded protections (power limitation or thermal cycling during thermal shutdown) are not triggered

Equation 1: pulse calculation formula:

$$Z_{TH\delta} = R_{TH} \cdot \delta + Z_{THtp}(1-\delta)$$

where $\delta = t_P/T$

Table 14. Thermal parameters

Area/island (cm^2)	Footprint	2	8
R1 = R7 = R9 = R11 (°C/W)	1.2		
R2 = R8 = R10 = R12 (°C/W)	6		
R3 (°C/W)	6		
R4 (°C/W)	7.7		
R5 (°C/W)	9	9	8
R6 (°C/W)	28	17	10
C1 = C7 = C9 = C11 (W.s/°C)	0.0008		
C2 = C8 = C10 = C12 (W.s/°C)	0.0016		
C3 (W.s/°C)	0.025		
C4 (W.s/°C)	0.75		
C5 (W.s/°C)	1	4	9
C6 (W.s/°C)	2.2	5	17

5 Package and packing information

5.1 ECOPACK® packages

In order to meet environmental requirements, ST offers these devices in ECOPACK® packages. ECOPACK® packages are lead-free. The category of Second Level Interconnect is marked on the package and on the inner box label, in compliance with JEDEC Standard JESD97. The maximum ratings related to soldering conditions are also marked on the inner box label.

ECOPACK is an ST trademark. ECOPACK specifications are available at www.st.com.

5.2 PowerSSO-24™ mechanical data

Figure 35. PowerSSO-24™ package dimensions

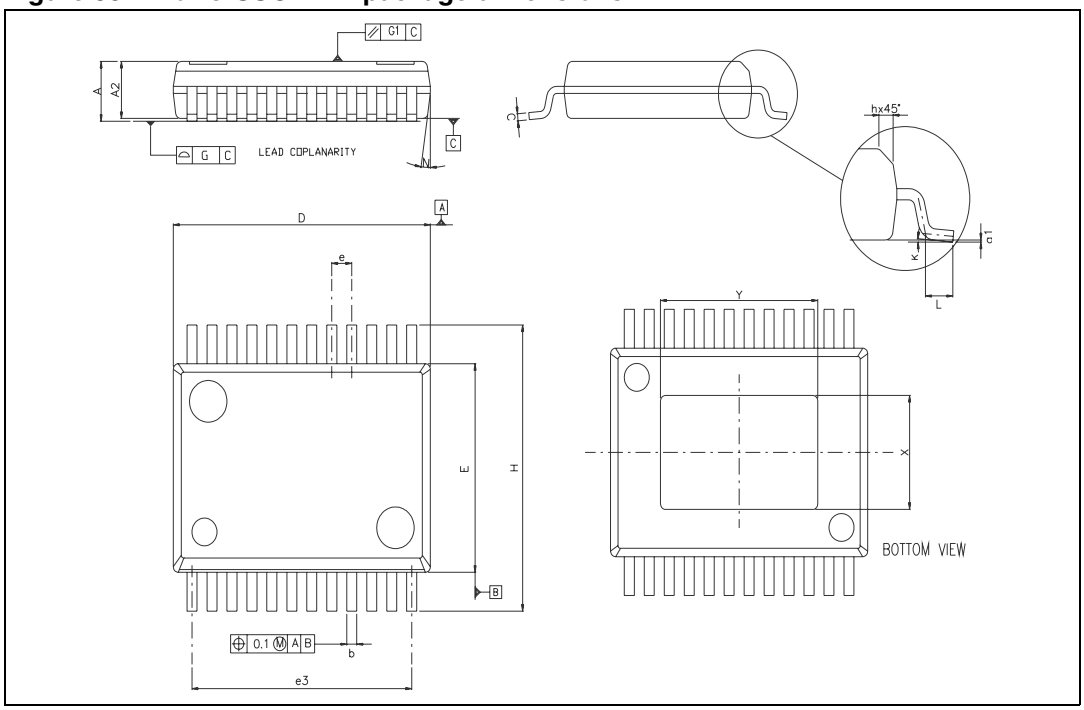

Table 15. PowerSSO-24™ mechanical data

Symbol	Millimeters		
	Min	Typ	Max
A	2.15		2.47
A2	2.15		2.40
a1	0		0.075
b	0.33		0.51
c	0.23		0.32
D	10.10		10.50
E	7.4		7.6

Table 15. PowerSSO-24™ mechanical data

Symbol	Millimeters		
	Min	Typ	Max
e		0.8	
e3		8.8	
G			0.1
G1			0.06
H	10.1		10.5
h			0.4
L	0.55		0.85
N			10deg
X	4.1		4.7
Y	6.5		7.1

5.3 Packing information

Figure 36. PowerSSO-24 tube shipment (no suffix)

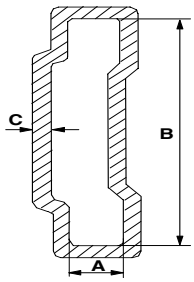

Base Q.ty	49
Bulk Q.ty	1225
Tube length (± 0.5)	532
A	3.5
B	13.8
C (± 0.1)	0.6

All dimensions are in mm.

Figure 37. Tape and reel shipment (suffix "TR")

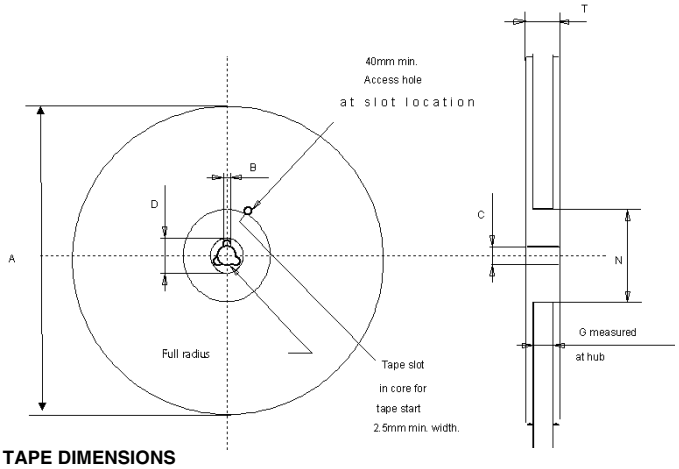

Reel dimensions

Base Q.ty	1000
Bulk Q.ty	1000
A (max)	330
B (min)	1.5
C (± 0.2)	13
F	20.2
G (+ 2 / -0)	24.4
N (min)	100
T (max)	30.4

All dimensions are in mm.

TAPE DIMENSIONS

According to Electronic Industries Association (EIA) Standard 481 rev. A, Feb 1986

Tape width	**W**	24
Tape Hole Spacing	**P0 (± 0.1)**	4
Component Spacing	**P**	12
Hole Diameter	**D (± 0.05)**	1.55
Hole Diameter	**D1 (min)**	1.5
Hole Position	**F (± 0.1)**	11.5
Compartment Depth	**K (max)**	2.85
Hole Spacing	**P1 (± 0.1)**	2

All dimensions are in mm.

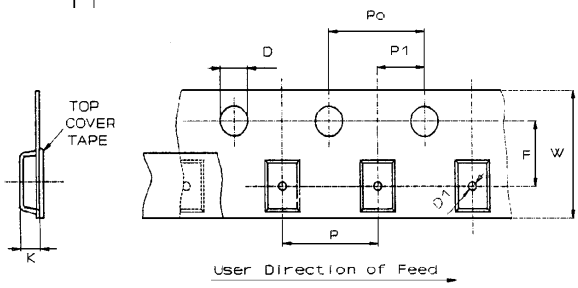

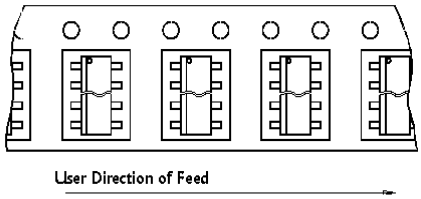

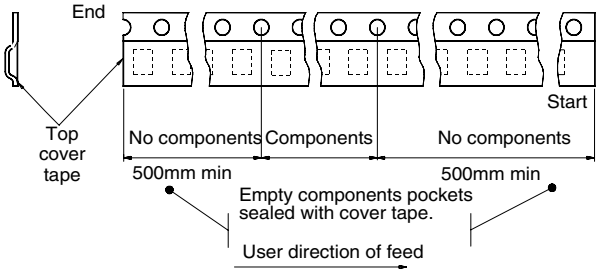

6 Revision history

Table 16. Document revision history

Date	Revision	Changes
8-Jan-2004	1	Initial release.
20-Jan-2006	2	Major general update
15-Mar-2007	3	Reformatted and restructured. Contents, List of tables and List of figures added. *Section 3.5: Maximum demagnetization energy (VCC = 13.5V)* added. *Section 5.1: ECOPACK® packages* information added. New disclaimer added.
01-Jun-2007	4	*Table 4: Absolute maximum ratings*: EMAX entries updated. *Table 13: Electrical transient requirements* :Test level values III and IV for test pulse 5b and notes updated *Figure 34: Thermal fitting model of a double channel HSD in PowerSSO-24* note added

Please Read Carefully:

Information in this document is provided solely in connection with ST products. STMicroelectronics NV and its subsidiaries (“ST”) reserve the right to make changes, corrections, modifications or improvements, to this document, and the products and services described herein at any time, without notice.

All ST products are sold pursuant to ST’s terms and conditions of sale.

Purchasers are solely responsible for the choice, selection and use of the ST products and services described herein, and ST assumes no liability whatsoever relating to the choice, selection or use of the ST products and services described herein.

No license, express or implied, by estoppel or otherwise, to any intellectual property rights is granted under this document. If any part of this document refers to any third party products or services it shall not be deemed a license grant by ST for the use of such third party products or services, or any intellectual property contained therein or considered as a warranty covering the use in any manner whatsoever of such third party products or services or any intellectual property contained therein.

UNLESS OTHERWISE SET FORTH IN ST’S TERMS AND CONDITIONS OF SALE ST DISCLAIMS ANY EXPRESS OR IMPLIED WARRANTY WITH RESPECT TO THE USE AND/OR SALE OF ST PRODUCTS INCLUDING WITHOUT LIMITATION IMPLIED WARRANTIES OF MERCHANTABILITY, FITNESS FOR A PARTICULAR PURPOSE (AND THEIR EQUIVALENTS UNDER THE LAWS OF ANY JURISDICTION), OR INFRINGEMENT OF ANY PATENT, COPYRIGHT OR OTHER INTELLECTUAL PROPERTY RIGHT.

UNLESS EXPRESSLY APPROVED IN WRITING BY AN AUTHORIZED ST REPRESENTATIVE, ST PRODUCTS ARE NOT RECOMMENDED, AUTHORIZED OR WARRANTED FOR USE IN MILITARY, AIR CRAFT, SPACE, LIFE SAVING, OR LIFE SUSTAINING APPLICATIONS, NOR IN PRODUCTS OR SYSTEMS WHERE FAILURE OR MALFUNCTION MAY RESULT IN PERSONAL INJURY, DEATH, OR SEVERE PROPERTY OR ENVIRONMENTAL DAMAGE. ST PRODUCTS WHICH ARE NOT SPECIFIED AS "AUTOMOTIVE GRADE" MAY ONLY BE USED IN AUTOMOTIVE APPLICATIONS AT USER’S OWN RISK.

Resale of ST products with provisions different from the statements and/or technical features set forth in this document shall immediately void any warranty granted by ST for the ST product or service described herein and shall not create or extend in any manner whatsoever, any liability of ST.

ST and the ST logo are trademarks or registered trademarks of ST in various countries.

Information in this document supersedes and replaces all information previously supplied.

The ST logo is a registered trademark of STMicroelectronics. All other names are the property of their respective owners.

© 2007 STMicroelectronics - All rights reserved

STMicroelectronics group of companies

Australia - Belgium - Brazil - Canada - China - Czech Republic - Finland - France - Germany - Hong Kong - India - Israel - Italy - Japan - Malaysia - Malta - Morocco - Singapore - Spain - Sweden - Switzerland - United Kingdom - United States of America

www.st.com